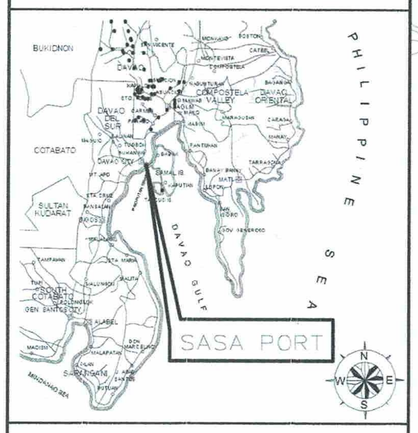

A1.1 **PORT LOCATION MAP**
SCALE 1:NTS METERS

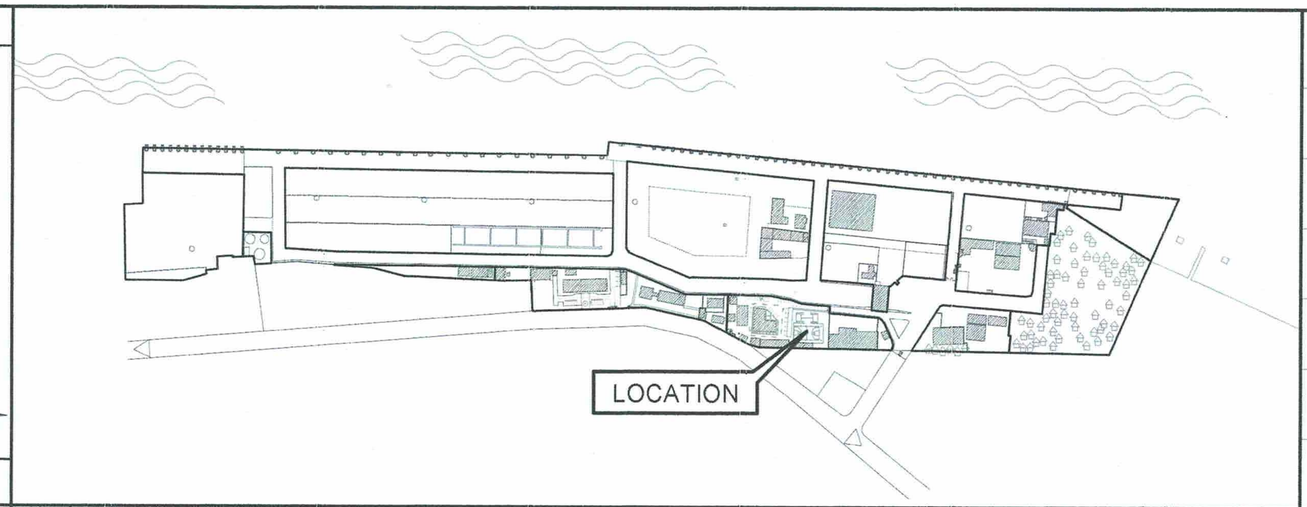

A1.2 **LOCATION PLAN**
SCALE 1: NTS METERS

SHT. NO.	DESCRIPTION
A1	PORT LOCATION MAP, LOCATION PLAN, SHEET CONTENTS, SITE DEVELOPMENT PLAN
A2	REFLECTED CEILING PLAN
A3	CEILING FRAMING PLAN
A4	SECTION THRU A-A, SECTION THRU B-B
A5	BAY SECTIONAL VIEW, SPOT DETAIL, COA BILLBOARD FRAMING PLAN
E1	LIGHTING AND POWER LAYOUT

A1.3 **SHEET CONTENTS**
SCALE 1:NTS METERS

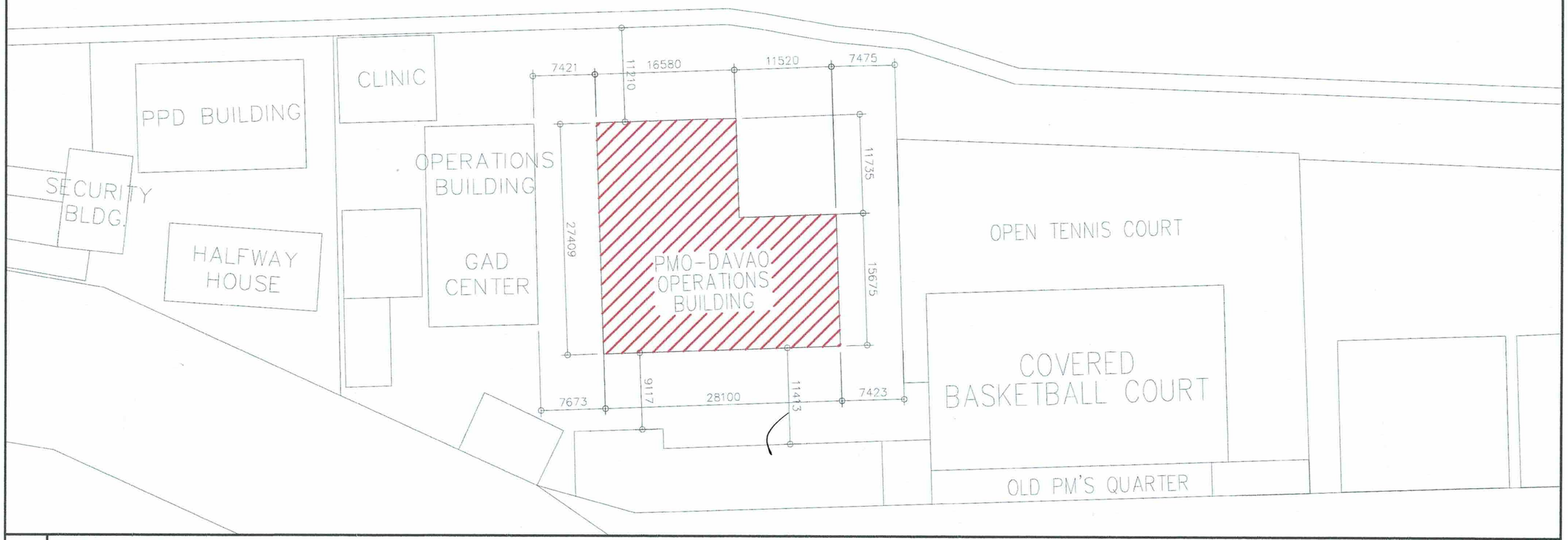

A1.4 **SITE DEVELOPMENT PLAN**
SCALE 1:500 METERS

PHILIPPINE PORTS AUTHORITY
PMO DAVAO

PREPARED BY:	CHECKED AND REVIEWED BY:	RECOMMENDING APPROVAL BY:	APROVED BY:
KENNETH JOHN B. REMOLADOR *ARCHITECT II*	EDELPETER L. DE LA ROSA *SUPERVISING ENGINEER*	LARA SIMONE L. ABA *ACTING ESD MANAGER*	ANALEE G. AGUILA *PORT MANAGER*

OWNER: ANALEE G. AGUILA, *PORT MANAGER*

SHEET CONTENTS: PORT LOCATION MAP, LOCATION PLAN, SHEET CONTENTS, SITE DEVELOPMENT PLAN

PROJECT TITLE: MAINTENANCE OF CEILING AT 4TH FLOOR PORT OPERATIONS BUILDING – A, SASA PORT, DAVAO CITY

LOCATION: SASA PORT, KM. 10 PORT AREA, DAVAO CITY

REVISIONS	
DATE	REMARKS
ADDENDUM	
NO.	–
PROJECT	–
DATE	–
DRAWN	–

SHEET NO. A1 OF 06

CADD BY KJR
DATE DRAWN 1/15/26
DATE UPDATED MM/DD/YY

DRAWING AND SPECIFICATION DULY SIGNED, STAMPED OR SEALED AS INSTRUMENTS OF SERVICES ARE THE PROPERTY OF THE ARCHITECT, WHETHER THE OBJECTS FOR WHICH THEY ARE MADE IS EXECUTED OR NOT. IT SHALL BE UNLAWFUL FOR ANY PERSON WITHOUT THE WRITTEN CONSENT OF THE ARCHITECT OF THE SAID DOCUMENTS TO DUPLICATE OR TO MAKE COPIES OF THE SAID DOCUMENTS FOR USE IN REPETITION OF AND FOR PROJECTS OR BUILDINGS WHETHER PARTLY OR WHOLELY EXECUTED. R.A.545 SECTION 25(4)

NOTE:

- REPLACE ALL CEILING BOARDS WITH 4.5mm THK. FIBER CEMENT BOARD
- EXISTING CEILING DESIGN OF THE MULTI-PURPOSE HALL AREA WILL BE RETAINED (CHECK DRAWINGS)
- REPLACE ALL LIGHTS AND LIGHTING FIXTURES
- DEMOLISH EXISTING LOW-PARTITION WALL BETWEEN MULTI-PURPOSE HALL AND STAGE

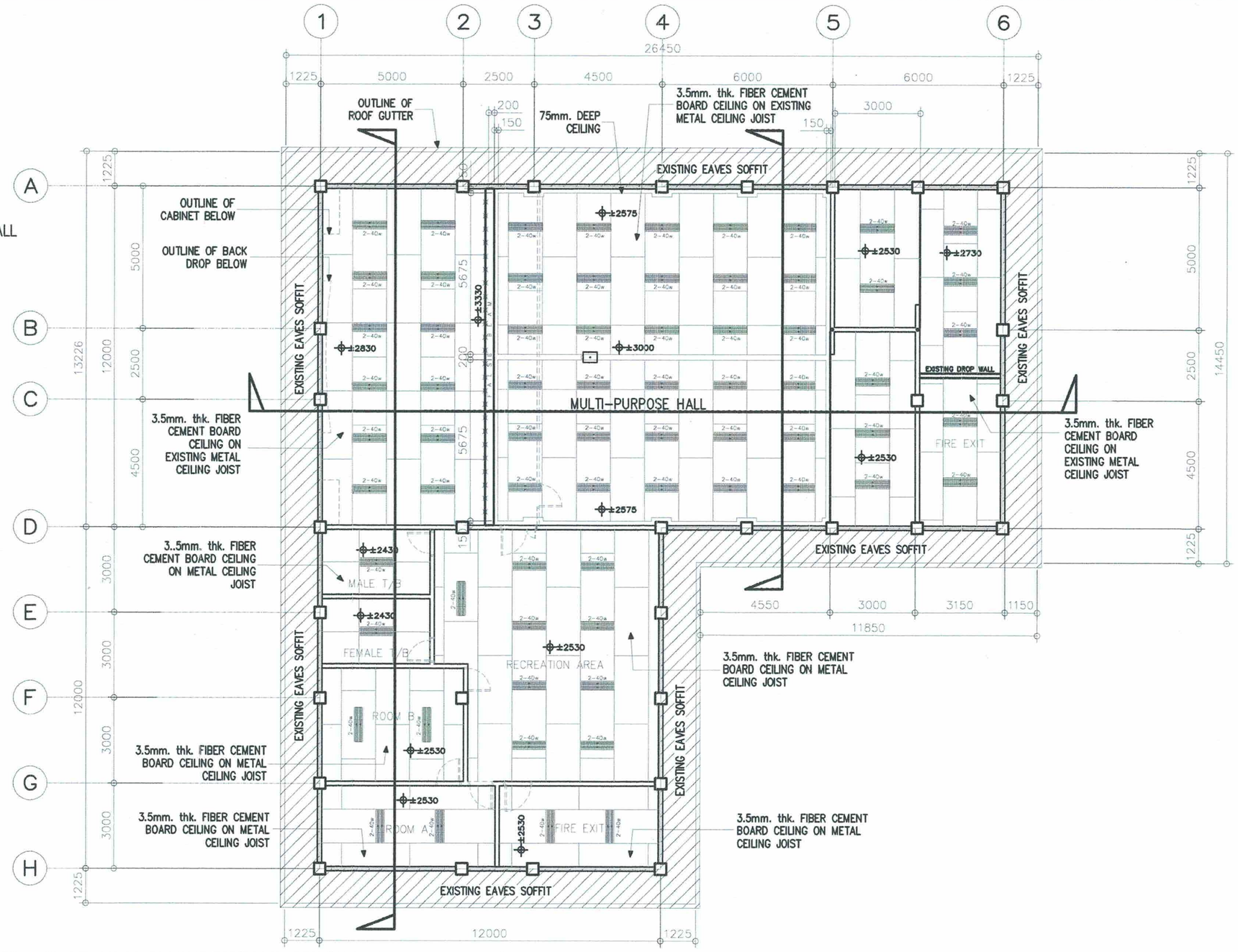

A2.1 **REFLECTED CEILING PLAN**
SCALE 1:150 METERS

PHILIPPINE PORTS AUTHORITY PMO DAVAO

PREPARED BY:	CHECKED AND REVIEWED BY:	RECOMMENDING APPROVAL BY:	APROVED BY:
KENNETH JOHN B. REMOLADOR ARCHITECT II	EDELPETER L. DE LA ROSA SUPERVISING ENGINEER	LARA SIMONE L. ABA ACTING ESD MANAGER	ANALEE G. AGUILA PORT MANAGER

OWNER: ANALEE G. AGUILA, PORT MANAGER

SHEET CONTENTS: REFLECTED CEILING PLAN

PROJECT TITLE: MAINTENANCE OF CEILING AT 4TH FLOOR PORT OPERATIONS BUILDING – A, SASA PORT, DAVAO CITY

LOCATION: SASA PORT, KM. 10 PORT AREA, DAVAO CITY

REVISIONS	
DATE	REMARKS
ADDENDUM	
NO.	–
PROJECT	–
DATE	–
DRAWN	–

SHEET NO. A2 OF 06

CADD BY K.R
DATE DRAWN 1/15/26
DATE UPDATED MM/DD/YY

DRAWING AND SPECIFICATION DULY SIGNED, STAMPED OR SEALED AS INSTRUMENTS OF SERVICES ARE THE PROPERTY OF THE ARCHITECT, WHETHER THE OBJECTS FOR WHICH THEY ARE MADE IS EXECUTED OR NOT. IT SHALL BE UNLAWFUL FOR ANY PERSON WITHOUT THE WRITTEN CONSENT OF THE ARCHITECT OF THE SAID DOCUMENTS TO DUPLICATE OR TO MAKE COPIES OF THE SAID DOCUMENTS FOR USE IN REPETITION OF AND FOR PROJECTS OR BUILDINGS WHETHER PARTLY OR WHOLELY EXECUTED. R.A.545 SECTION 25(4).

NOTE:

- EXISTING CEILING FRAMING OF THE MULTI-PURPOSE HALL AREA WILL BE RETAINED
- REPLACE EXISTING CEILING FRAMING OF RECREATION AREA, MALE T/B, FEMALE T/B, ROOM A, ROOM B, AND FIRE EXIT AREA WITH METAL CEILING JOIST SPACED @ 400mm O.C.B.W

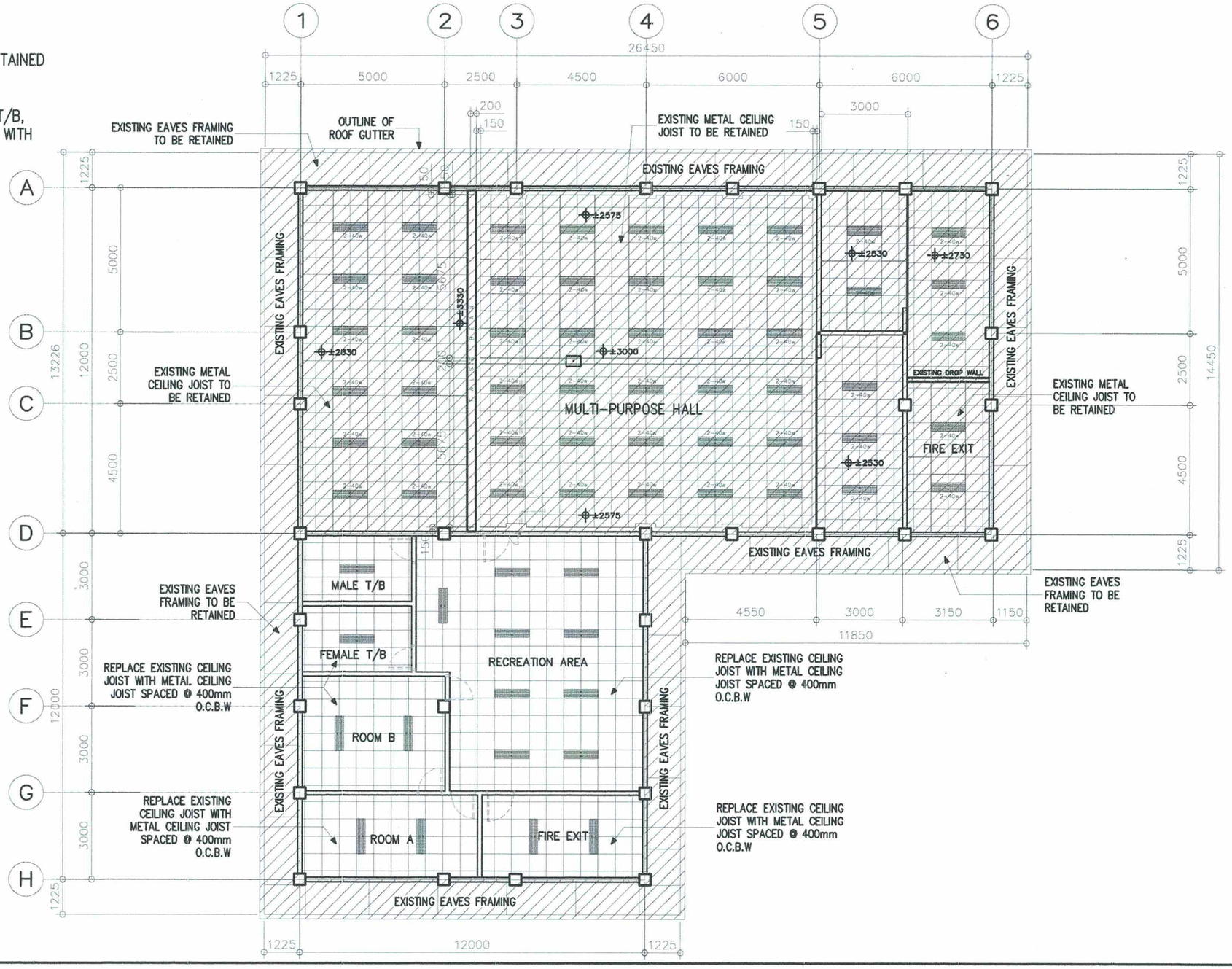

A3.1 **CEILING FRAMING PLAN**
SCALE 1:150 METERS

PHILIPPINE PORTS AUTHORITY PMO DAVAO

PREPARED BY:	CHECKED AND REVIEWED BY:	RECOMMENDING APPROVAL BY:	APROVED BY:
KENNETH JOHN B. REMOLADOR ARCHITECT II	EDELPETER L. DE LA ROSA SUPERVISING ENGINEER	LARA SIMONE L. ABA ACTING ESD MANAGER	ANALEE G. AGUILA PORT MANAGER

OWNER: ANALEE G. AGUILA, PORT MANAGER

SHEET CONTENTS: CEILING FRAMING PLAN

PROJECT TITLE: MAINTENANCE OF CEILING AT 4TH FLOOR PORT OPERATIONS BUILDING – A, SASA PORT, DAVAO CITY

LOCATION: SASA PORT, KM. 10 PORT AREA, DAVAO CITY

REVISIONS	
DATE	REMARKS
ADDENDUM	
NO.	–
PROJECT	–
DATE	–
DRAWN	–

SHEET NO. A3 OF 06

CADD BY KJR
DATE DRAWN 1/15/26
DATE UPDATED MM/DD/YY

DRAWING AND SPECIFICATION DULY SIGNED, STAMPED OR SEALED AS INSTRUMENTS OF SERVICES ARE THE PROPERTY OF THE ARCHITECT, WHETHER THE OBJECTS FOR WHICH THEY ARE MADE IS EXECUTED OR NOT. IT SHALL BE UNLAWFUL FOR ANY PERSON WITHOUT THE WRITTEN CONSENT OF THE ARCHITECT OF THE SAID DOCUMENTS TO DUPLICATE OR TO MAKE COPIES OF THE SAID DOCUMENTS FOR USE IN REPETITION OF AND FOR PROJECTS OR BUILDINGS WHETHER PARTLY OR WHOLELY EXECUTED. R.A.545 SECTION 25(4).

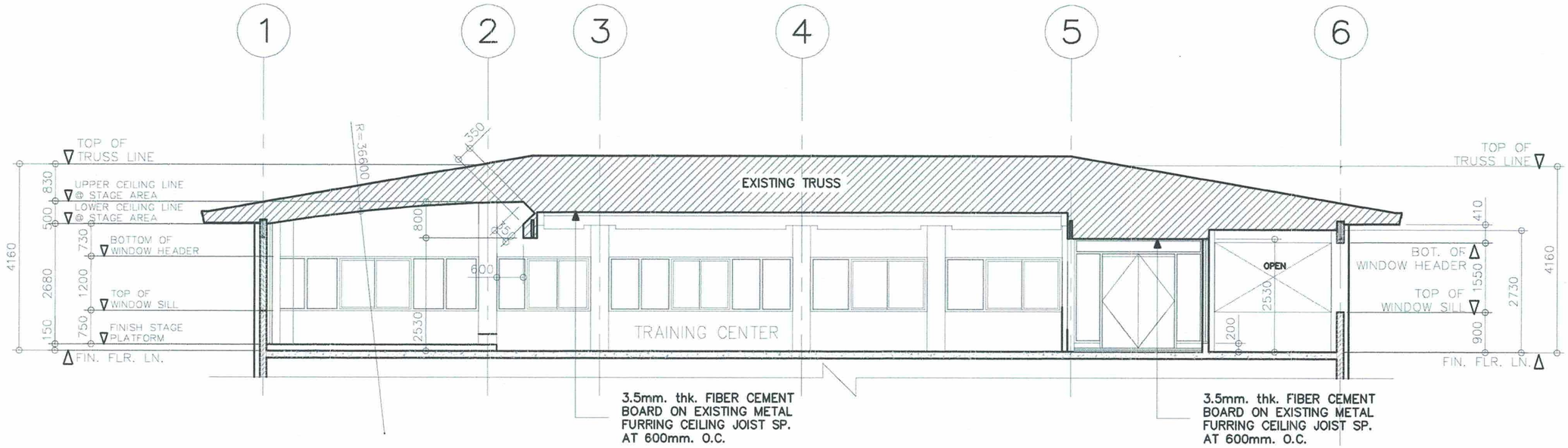

A4.1 **SECTION THRU A–A**
SCALE 1:70 METERS

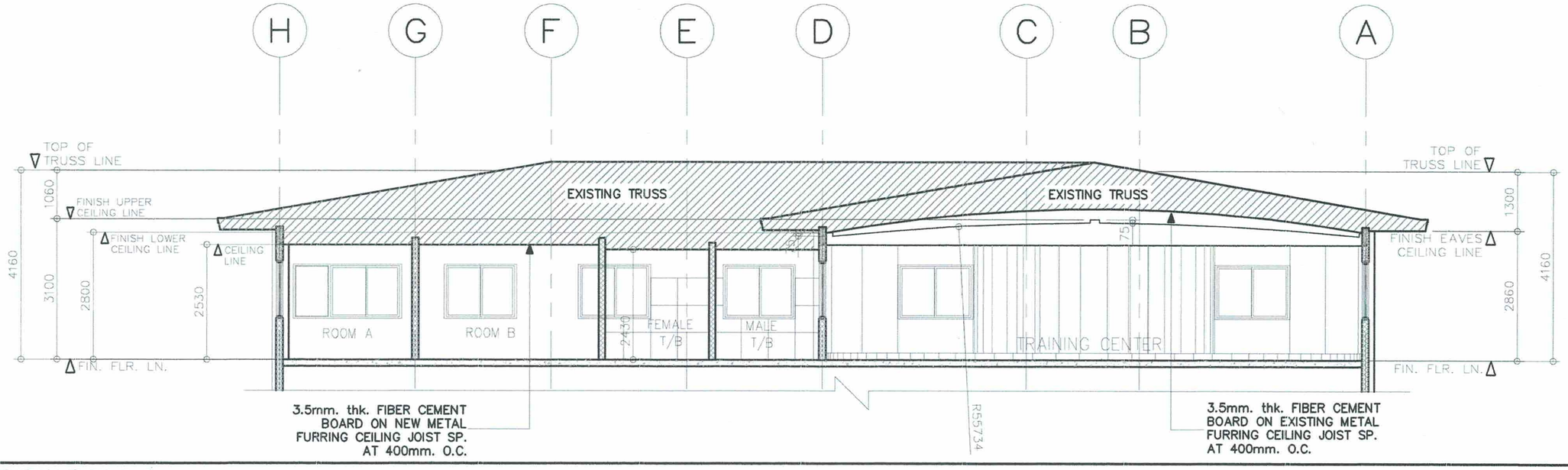

A4.2 **SECTION THRU B–B**
SCALE 1:70 METERS

PHILIPPINE PORTS AUTHORITY PMO DAVAO

PREPARED BY:	CHECKED AND REVIEWED BY:	RECOMMENDING APPROVAL BY:	APROVED BY:
KENNETH JOHN B. REMOLADOR *ARCHITECT II*	EDELPETER L. DE LA ROSA *SUPERVISING ENGINEER*	LARA SIMONE L. ABA *ACTING ESD MANAGER*	ANALEE G. AGUILA *PORT MANAGER*

OWNER: ANALEE G. AGUILA, *PORT MANAGER*

SHEET CONTENTS: SECTION THRU A–A, SECTION THRU B–B

PROJECT TITLE: MAINTENANCE OF CEILING AT 4TH FLOOR PORT OPERATIONS BUILDING – A, SASA PORT, DAVAO CITY

LOCATION: SASA PORT, KM. 10 PORT AREA, DAVAO CITY

REVISIONS	
DATE	REMARKS
ADDENDUM	
NO.	–
PROJECT	–
DATE	–
DRAWN	–

SHEET NO. A4 OF 06

CADD BY KJR
DATE DRAWN 1/15/26
DATE UPDATED MM/DD/YY

DRAWING AND SPECIFICATION DULY SIGNED, STAMPED OR SEALED AS INSTRUMENTS OF SERVICES ARE THE PROPERTY OF THE ARCHITECT, WHETHER THE OBJECTS FOR WHICH THEY ARE MADE IS EXECUTED OR NOT, IT SHALL BE UNLAWFUL FOR ANY PERSON WITHOUT THE WRITTEN CONSENT OF THE ARCHITECT OF THE SAID DOCUMENTS TO DUPLICATE OR TO MAKE COPIES OF THE SAID DOCUMENTS FOR USE IN REPETITION OF AND FOR PROJECTS OR BUILDINGS WHETHER PARTLY OR WHOLELY EXECUTED. R.A.545 SECTION 25(4).

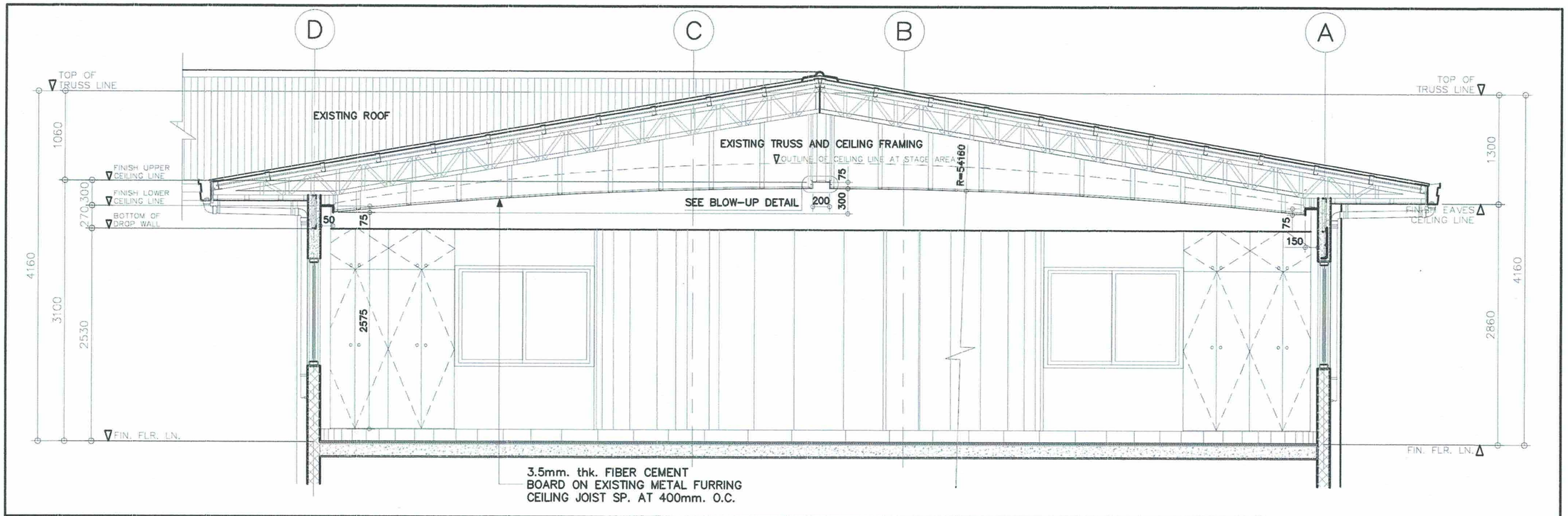

A5.1 **BAY SECTIONAL VIEW**
SCALE 1:50 METERS

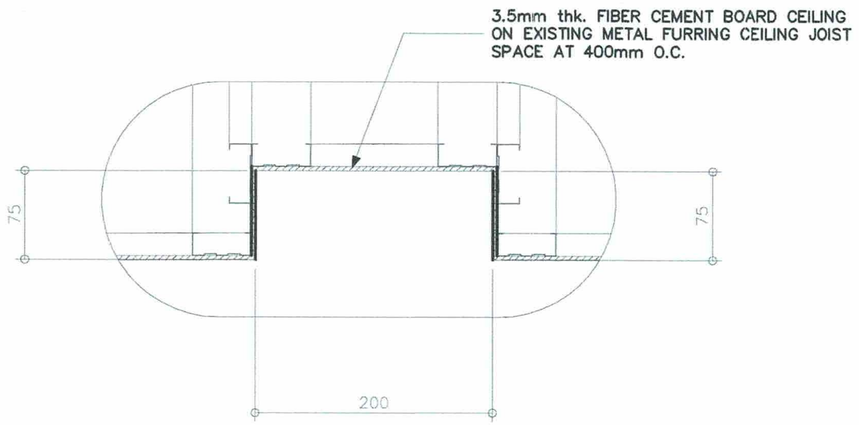

A5.2 **SPOT DETAIL**
SCALE 1:5 METERS

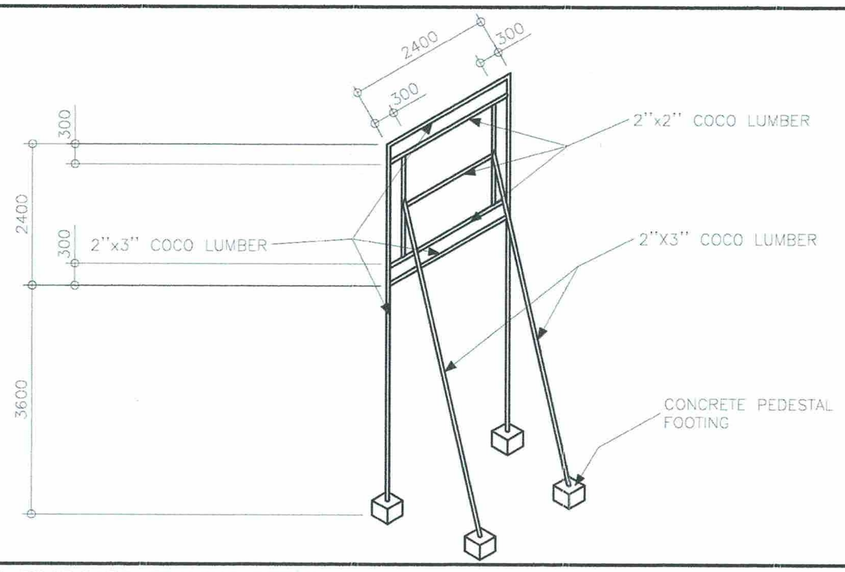

A5.3 **COA BILLBOARD FRAMING DETAIL**
SCALE 1:100 METERS

PHILIPPINE PORTS AUTHORITY PMO DAVAO

PREPARED BY:	CHECKED AND REVIEWED BY:	RECOMMENDING APPROVAL BY:	APROVED BY:
KENNETH JOHN B. REMOLADOR *ARCHITECT II*	EDELPETER L. DE LA ROSA *SUPERVISING ENGINEER*	LARA SIMONE L. ABA *ACTING ESD MANAGER*	ANALEE G. AGUILA *PORT MANAGER*

OWNER: ANALEE G. AGUILA, *PORT MANAGER*

SHEET CONTENTS: BAY SECTIONAL VIEW, SPOT DETAIL, COA BILLLBOARD FRAMING DETAIL

PROJECT TITLE: MAINTENANCE OF CEILING AT 4TH FLOOR PORT OPERATIONS BUILDING – A, SASA PORT, DAVAO CITY

LOCATION: SASA PORT, KM. 10 PORT AREA, DAVAO CITY

REVISIONS	
DATE	REMARKS
ADDENDUM	
NO.	-
PROJECT	-
DATE	-
DRAWN	-

SHEET NO. **A5** OF **06**

CADD BY KJR
DATE DRAWN 1/15/26
DATE UPDATED MM/DD/YY

DRAWING AND SPECIFICATION DULY SIGNED, STAMPED OR SEALED AS INSTRUMENTS OF SERVICES ARE THE PROPERTY OF THE ARCHITECT, WHETHER THE OBJECTS FOR WHICH THEY ARE MADE IS EXECUTED OR NOT. IT SHALL BE UNLAWFUL FOR ANY PERSON WITHOUT THE WRITTEN CONSENT OF THE ARCHITECT OF THE SAID DOCUMENTS TO DUPLICATE OR TO MAKE COPIES OF THE SAID DOCUMENTS FOR USE IN REPETITION OF AND FOR PROJECTS OR BUILDINGS WHETHER PARTLY OR WHOLELY EXECUTED. R.A.545 SECTION 25(4).

NOTE:

- EXISTING ELECTRICAL WIRINGS IN THE MULTI-PURPOSE HALL CENTER WILL BE RETAINED
- REPLACE ALL EXISTING ELECTRICAL WIRINGS OF THE RECREATION AREA, MALE T/B, FEMALE T/B, ROOM A, ROOM B, AND FIRE EXIT AREA.
- REPLACE ALL EXISTING SWITCH AND OUTLET OF ALL AREAS

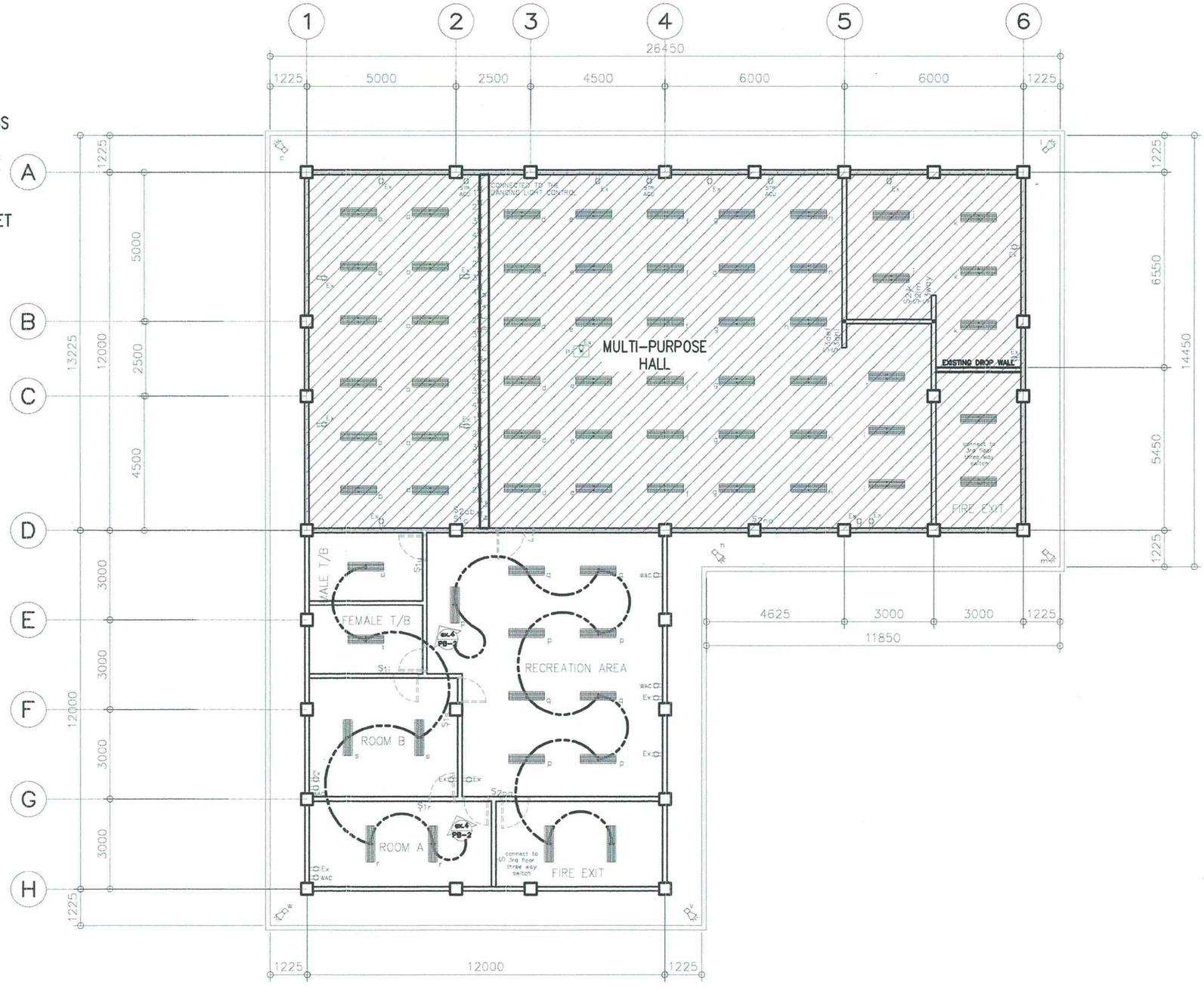

E1.1 **LIGHTING AND POWER LAYOUT**

SCALE 1:150 METERS

PHILIPPINE PORTS AUTHORITY PMO DAVAO

PREPARED BY:	CHECKED AND REVIEWED BY:	RECOMMENDING APPROVAL BY:	APROVED BY:	OWNER:
KENNETH JOHN B. REMOLADOR *ARCHITECT II*	EDELPETER L. DE LA ROSA *SUPERVISING ENGINEER*	LARA SIMONE L. ABA *ACTING ESD MANAGER*	ANALEE G. AGUILA *PORT MANAGER*	ANALEE G. AGUILA *PORT MANAGER*

SHEET CONTENTS: LIGHTING AND POWER LAYOUT

PROJECT TITLE: MAINTENANCE OF CEILING AT 4TH FLOOR PORT OPERATIONS BUILDING – A, SASA PORT, DAVAO CITY

LOCATION: SASA PORT, KM. 10 PORT AREA, DAVAO CITY

REVISIONS	
DATE	REMARKS
ADDENDUM	
NO.	–
PROJECT	–
DATE	–
DRAWN	–

SHEET NO. E1 OF 06

CADD BY KJR
DATE DRAWN 1/15/26
DATE UPDATED MM/DD/YY

DRAWING AND SPECIFICATION DULY SIGNED, STAMPED OR SEALED AS INSTRUMENTS OF SERVICES ARE THE PROPERTY OF THE ARCHITECT, WHETHER THE OBJECTS FOR WHICH THEY ARE MADE IS EXECUTED OR NOT. IT SHALL BE UNLAWFUL FOR ANY PERSON WITHOUT THE WRITTEN CONSENT OF THE ARCHITECT OF THE SAID DOCUMENTS TO DUPLICATE OR TO MAKE COPIES OF THE SAID DOCUMENTS FOR USE IN REPETITION OF AND FOR PROJECTS OR BUILDINGS WHETHER PARTLY OR WHOLELY EXECUTED. R.A.545 SECTION 25(4).